SECTION 44: AP74 & AUTOPILOT SERVOS

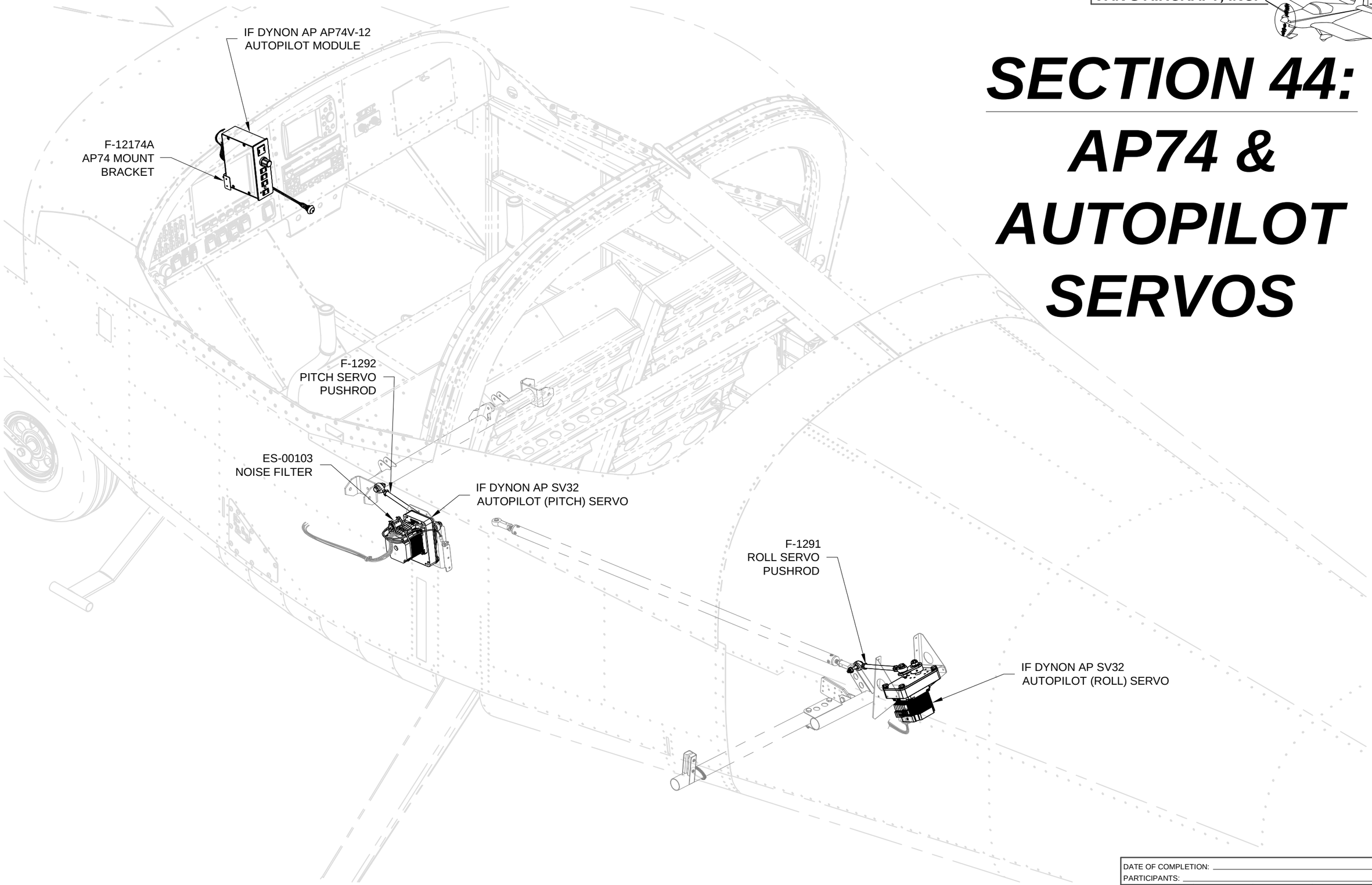

DATE OF COMPLETION: _____

PARTICIPANTS: _____

Step 1: Remove the IF DYNON DEK 180-12 Dynon EFIS/EMS from the DYNON 100422-000 D-100 Series Mounting Tray attached to the F-1202T Inst Panel Left D-180. Disconnect the Static and Pitot Lines and WH-RV12-DYNON Dynon D-180 Harness from the back of the Dynon EFIS/EMS. Remove the inst panel left D-180 and D-100 series mounting tray from the aircraft. See Section 29 and Section 42 for reference. Remove the AV CONTROL BOARD 12 Switch Fuse Connector PCB.

Step 2: Use two sets of 6-32 screws and nuts to align the F-12174B AP74 Drill Template to the F-1202T Inst Panel Left D-180. Match-Drill #40 the holes of the AP74 drill template into the inst panel left D-180. Remove the AP74 drill template and remove all the material up to the outside edges of the holes. Square the corner holes. Note that this will also remove a significant portion of the flange of the DYNON 100422-000 D-100 Series Mounting Tray attached to the inst panel left D-180. See Figure 1.

Step 3: Final-Drill #19 the hole indicated in Figure 2.

Step 4: Round the edge indicated in Figure 2 with a file.

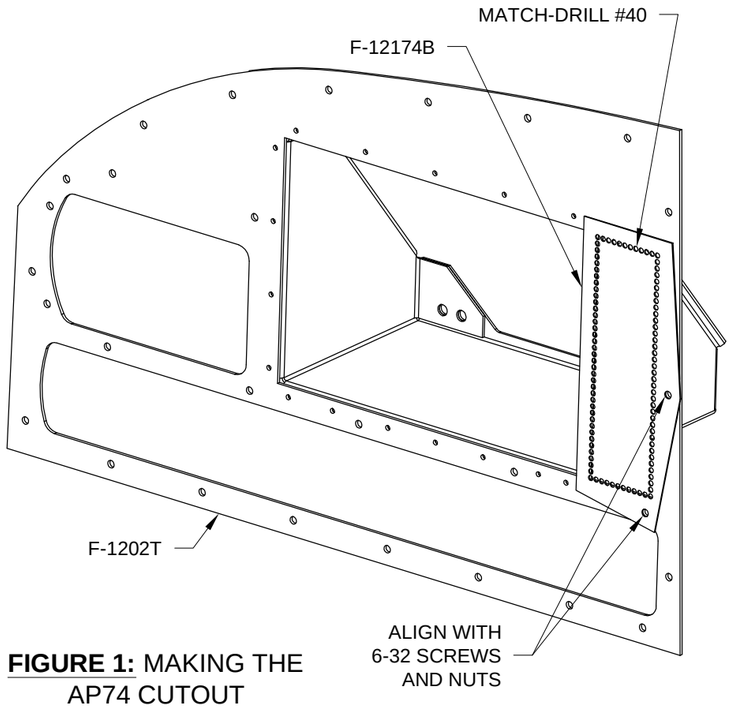

FIGURE 1: MAKING THE AP74 CUTOUT

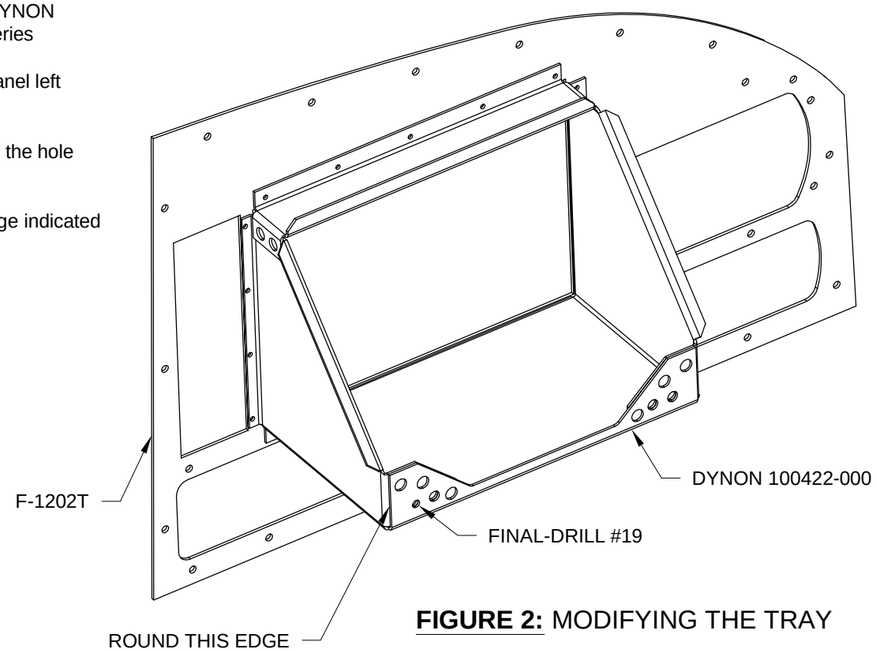

FIGURE 2: MODIFYING THE TRAY

Step 5: Use an 8-32 screw to align the F-12174A AP74 Mount Bracket as shown in Figure 3. Double check that the AP74 mount bracket pushes up tight against the back and side of the DYNON 100422-000 D-100 Series Mounting Tray as shown in Figure 3. If required repeat Step 4.

Step 6: Match-Drill #40 both holes in the F-12174A AP74 Mount Bracket into the side of the DYNON 100422-000 D-100 Series Mounting Tray as shown in Figure 3. Remove the AP74 mount bracket.

Step 7: Dimple the two holes drilled in Step 6 in the DYNON 100422-000 D-100 Series Mounting Tray, flush on the ***inside*** face.

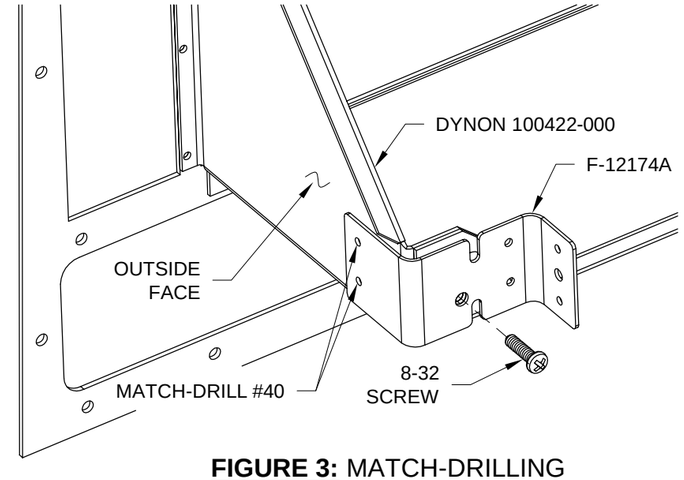

FIGURE 3: MATCH-DRILLING THE TRAY

Step 8: Remove the template portion of the F-12174A AP74 Mount Bracket as shown in Figure 4.

Step 9: Dimple the F-12174A AP74 Mount Brackets two nutplate attach holes and the two holes that will attach the AP74 mount bracket to the DYNON 100422-000 D-100 Series Mounting Tray. See Figure 5 to determine correct dimple direction. Dimple the attach holes in the nutplate called out in Figure 5.

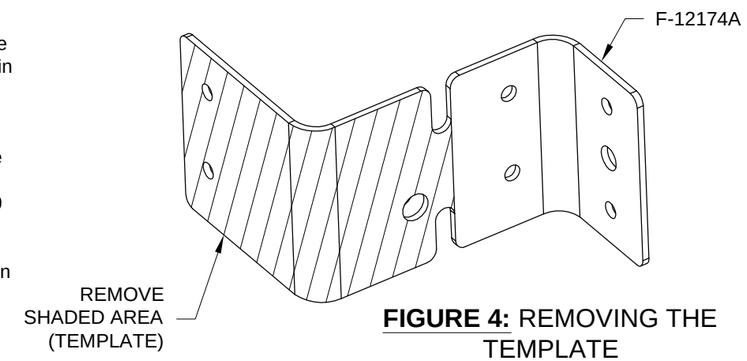

FIGURE 4: REMOVING THE TEMPLATE

Step 10: Rivet the nutplate called out in Figure 5 to the F-12174A AP74 Mount Bracket.

Step 11: Rivet the F-12174A AP74 Mount Bracket to the DYNON 100422-000 D-100 Series Mounting Tray as shown in Figure 5.

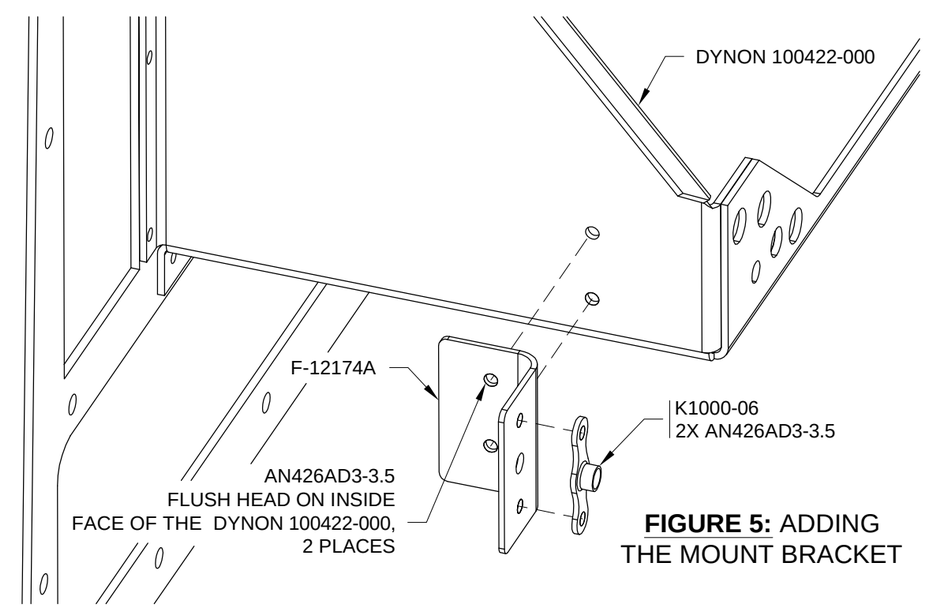

FIGURE 5: ADDING THE MOUNT BRACKET

Step 1: Re-install the F-1202T Inst Panel Left D-180 into the aircraft. See Section 29 and Section 42 for reference.

Step 2: Double check that a fuse is in the autopilot position on the AV CONTROL BOARD 12. See Page 42-03, Figure 3.

Step 3: Slide the IF DYNON AP AP74V-12 Autopilot Module through its opening in the panel then tighten the attach screw into the nutplate on the F-12174A AP74 Mount Bracket.

Step 4: Connect the 25-pin d-sub connector from the WH-RV12-OPTIONAL Optional Wiring Harness to the back of the IF DYNON AP AP74V-12 Autopilot Module.

Step 5: Connect the Static and Pitot Lines and WH-RV12-DYNON Dynon D-180 Harness to the back of the IF DYNON DEK 180-12 Dynon EFIS/EMS. Re-install the Dynon EFIS/EMS into the DYNON 100422-000 D-100 Series Mounting Tray.

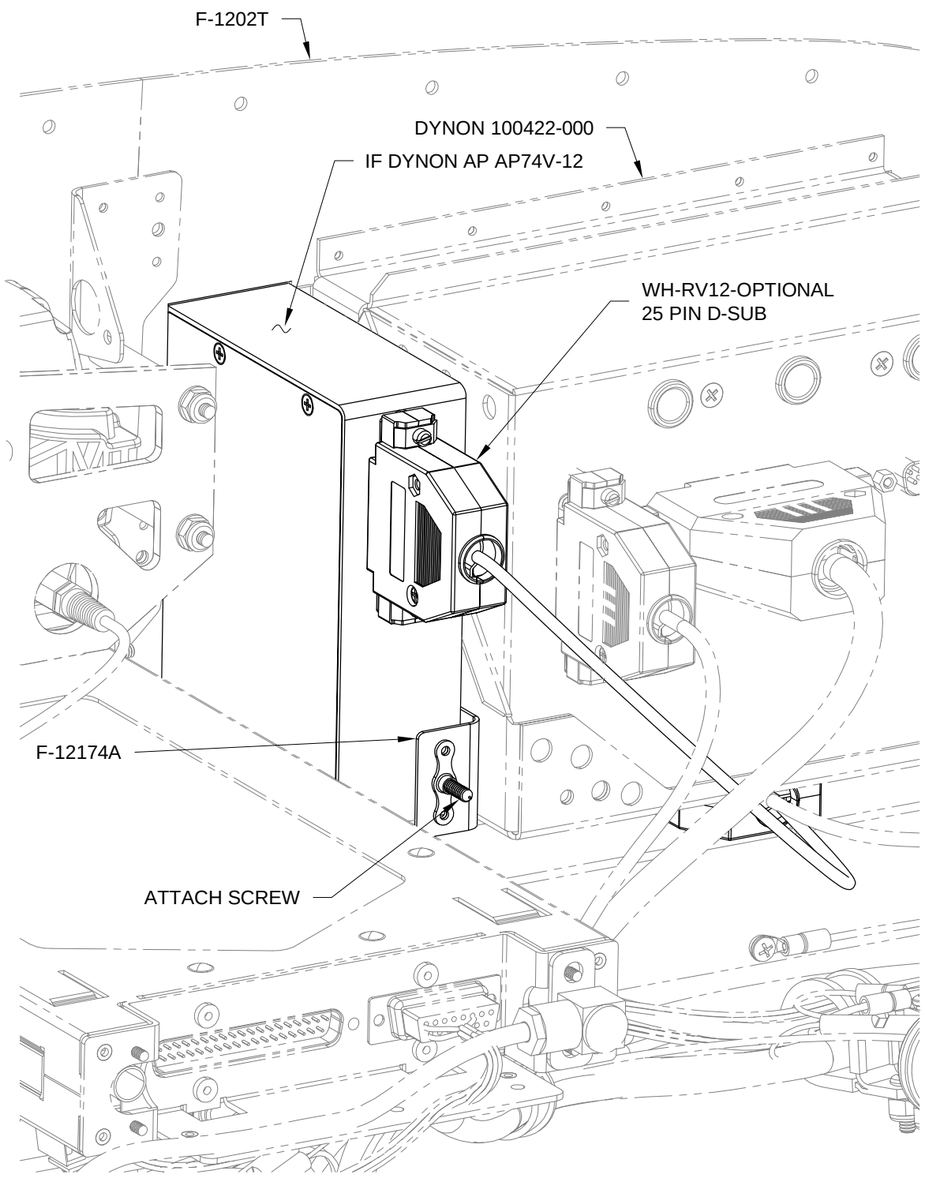

FIGURE 1: INSTALLING THE AUTOPILOT MODULE

Step 6: Cut the F-1291 Roll Servo Pushrod and the F-1292 Pitch Servo Pushrod from AT6-058X5/16 Tube. Drill and tap the ends of each pushrod. See Figure 2.

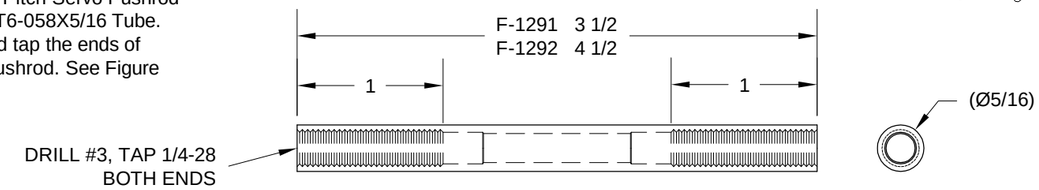

FIGURE 2: MAKING THE PUSHROD TUBES

Step 7: Assemble the F-1291 Roll Servo Pushrod and hardware as shown in Figure 3 to make the Roll Servo Pushrod Assembly.

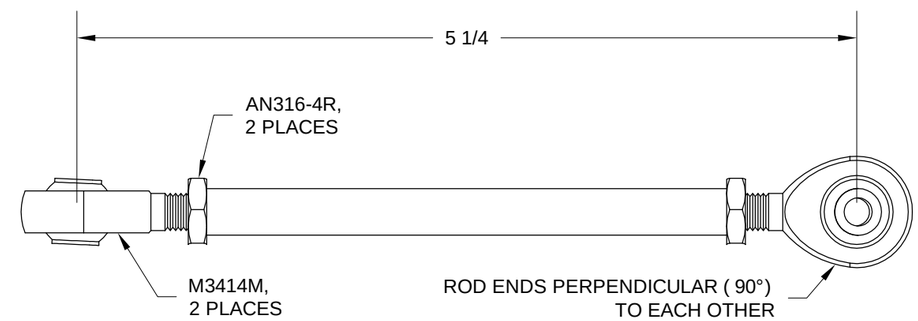

FIGURE 3: ROLL SERVO PUSHROD ASSEMBLY

Step 8: Assemble the F-1292 Pitch Servo Pushrod and hardware as shown in Figure 4 to make the Pitch Servo Pushrod Assembly.

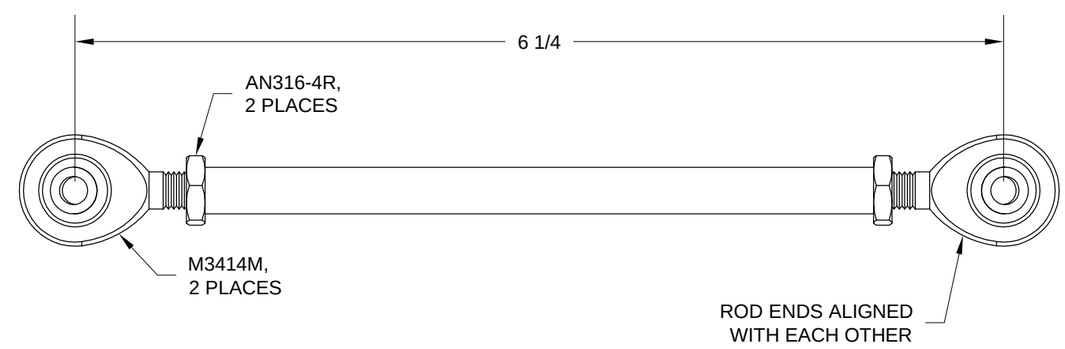

FIGURE 4: PITCH SERVO PUSHROD ASSEMBLY

Step 1: Remove the F-1206E Baggage Cover and F-1207F Baggage Bulkhead Corrugation. See Figure 1.

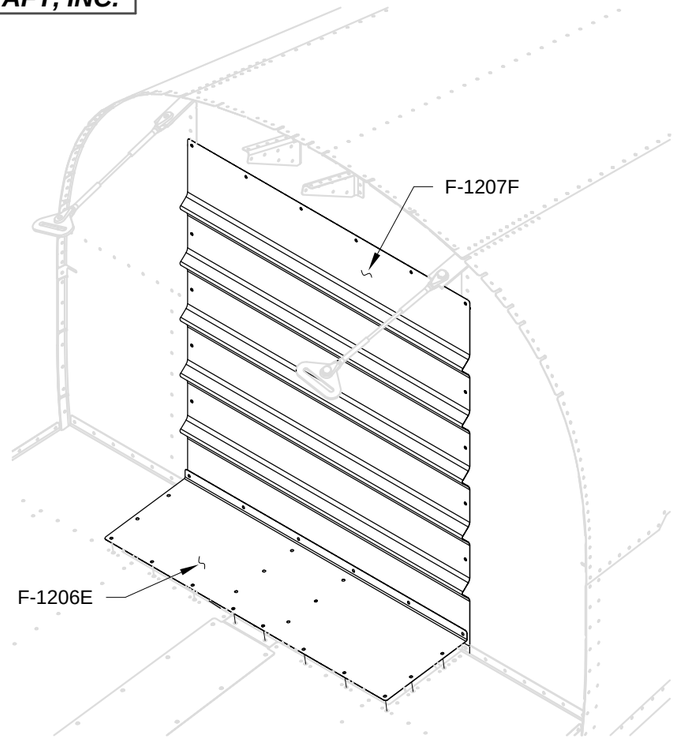

FIGURE 1: REMOVE ACCESS COVERS

Step 2: Remove the F-1227 Seat Ramp Cover. See Figure 2.

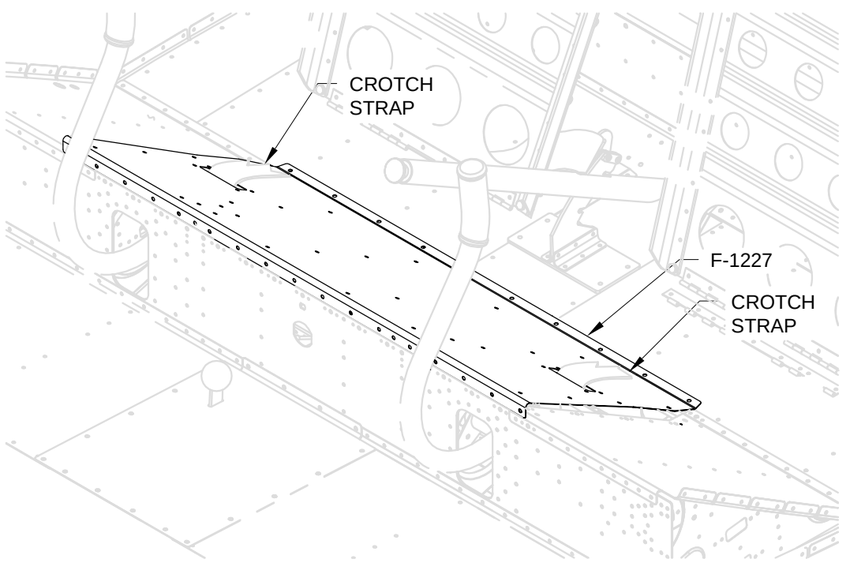

FIGURE 2: REMOVING THE SEAT RAMP COVER

Step 3: Strip all the wires coming from both IF DYNON AP SV32 Autopilot Servos.

Step 4: Crimp spade connectors to all of the wires on each IF DYNON AP SV32 Autopilot Servo as shown in Figure 3. Note which gender connector goes on which wire color.

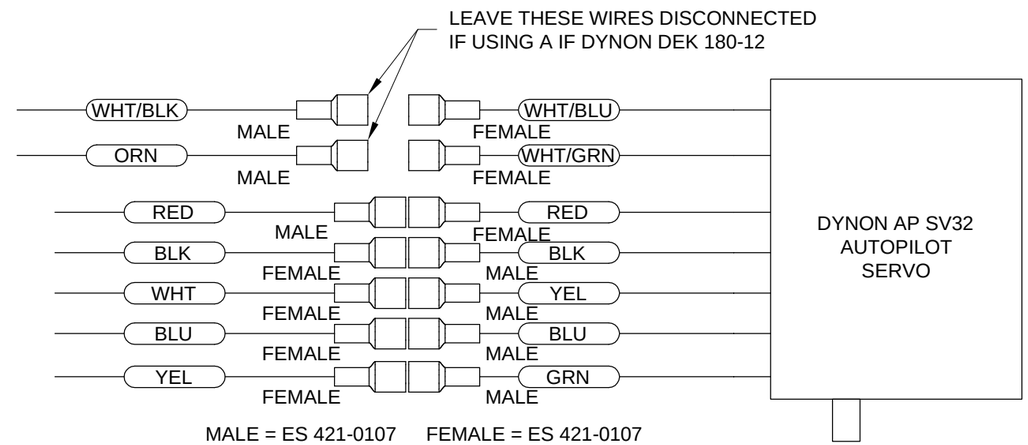

FIGURE 3: SERVO CONNECTIONS

Step 1: Connect the Roll Servo Pushrod Assembly to the IF DYNON AP SV32 Autopilot Servo. See Figure 1.

Step 2: Connect using Page 44-04, Figure 3, the wires and corresponding spade terminals coming from the IF DYNON AP SV32 Autopilot Servo to the spade terminals on the wires in the WH-B170 Autopilot Wire.

Step 3: Bolt the IF DYNON AP SV32 Autopilot Servo to the F-1286B-L & -R Servo Angles using Loctite 242 or equivalent medium thread locker. See Figure 1.

Step 4: Install a tie-wrap around the IF DYNON AP SV32 Autopilot Servo and its wires as shown in Figure 1.

Step 5: Remove the hardware holding the left Flaperon Pushrod Assembly to the WD-1215-L Flaperon Torque Arm.

Step 6: Using new hardware provided, attach the Roll Servo Pushrod Assembly and Flaperon Pushrod Assembly to the WD-1215-L Flaperon Torque Arm. See Figure 1.

Step 7: Reinstall the bolt and nut used to attach the right Flaperon Pushrod Assembly to the WD-1215-R Flaperon Torque Arm for the orientation shown in Figure 1.

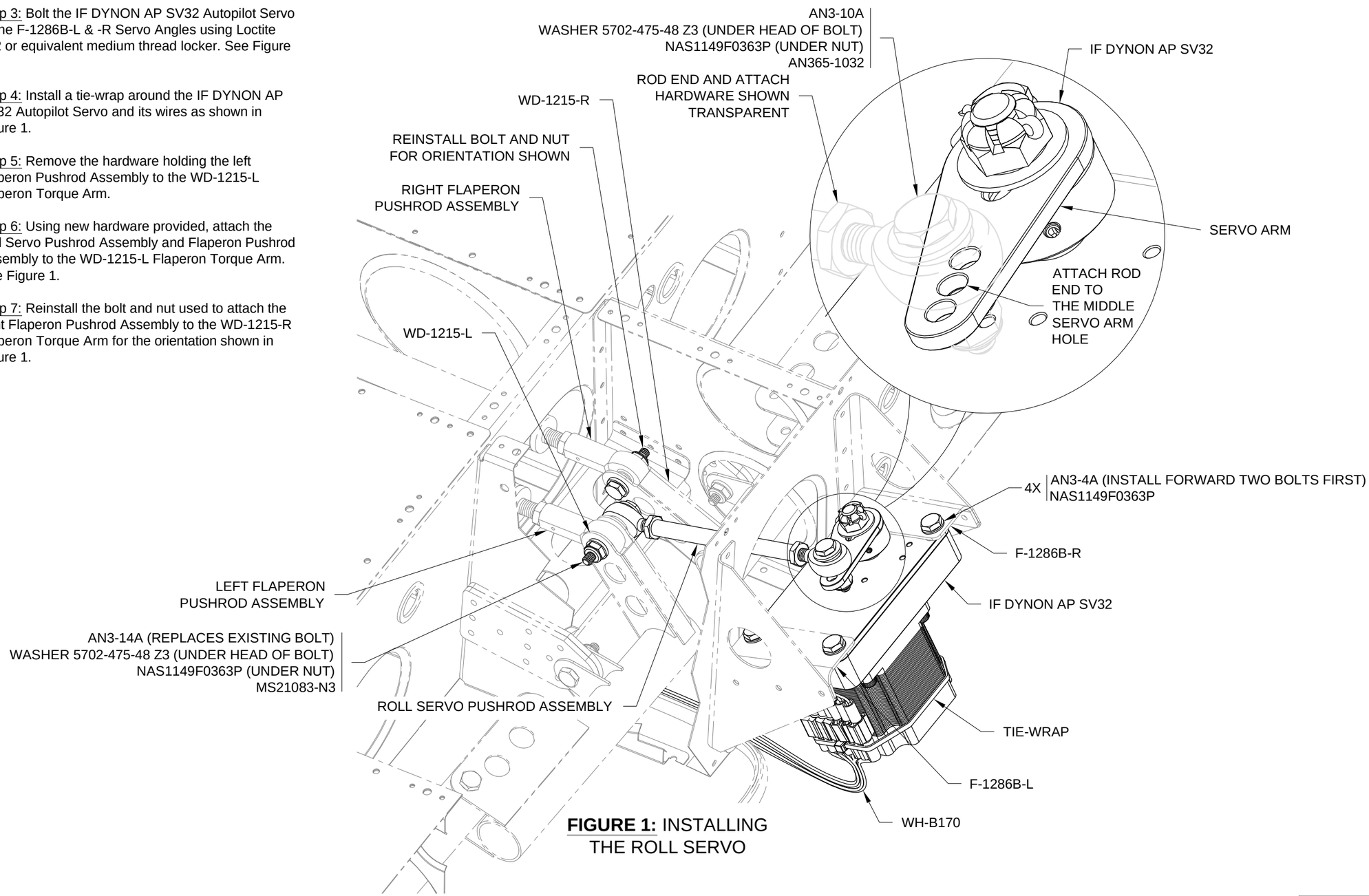

FIGURE 1: INSTALLING THE ROLL SERVO

Step 1: Insert the bolt that will attach the Pitch Servo Pushrod Assembly to the arm of the IF DYNON AP SV32 Autopilot Servo.

Step 2: Attach the autopilot servo to the F-1215-R Seat Rib and F-1269 Servo Doubler using the hardware called out in Figure 1 and Loctite 242 or equivalent medium thread locker.

Step 3: Connect the Pitch Servo Pushrod Assembly to the tab on the WD-1210 Control Column and the IF DYNON AP SV32 Autopilot Servo arm. See Figure 1.

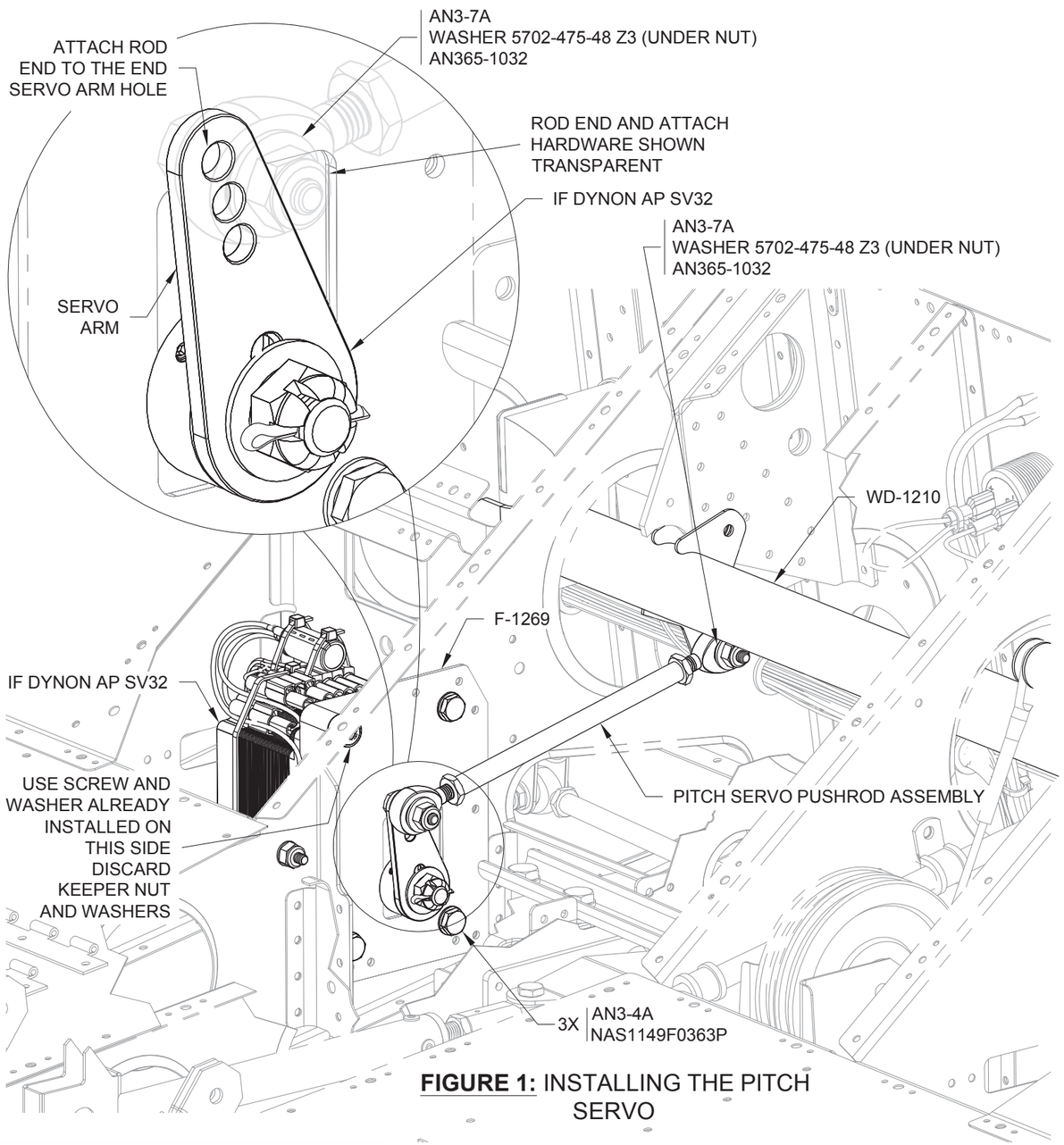

FIGURE 1: INSTALLING THE PITCH SERVO

Step 4: Connect the spade terminal on the red wire coming from the IF DYNON AP SV32 Autopilot Servo with the appropriate gender spade connector coming from the ES-00103 Noise Filter. There are two red wires crimped together in one spade connector from the WH-RV12-OPTIONAL (RED) and WH-B170 (RED) harnesses. Connect this spade connector to the remaining spade connector on the noise filter. Connect the ring terminal on the ground wire to the F-1215-R Seat Rib. See Figure 2 and Figure 3.

Step 5: Connect using Page 44-04, Figure 3, the remaining wires and corresponding spade terminals coming from the IF DYNON AP SV32 Autopilot Servo to the spade terminals on the wires of the WH-B170 Autopilot Wire.

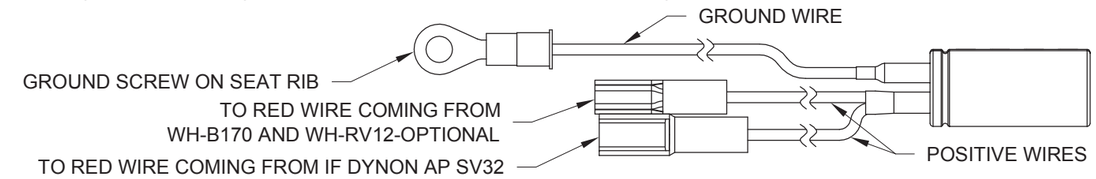

FIGURE 2: NOISE FILTER DETAIL

Step 6: Install a tie-wrap around the IF DYNON AP SV32 Autopilot Servo and its wires. Tie-wrap the ES-00103 Noise Filter to the autopilot servo wires. Tie-wrap wires as required to prevent wires from chafing. See Figure 1 and Figure 3.

Step 7: Check controls for full range of motion. Re-install the F-1227 Seat Ramp Cover, F-1206E Baggage Cover and F-1207F Baggage Bulkhead Corrugation.

Step 8: Follow the instructions supplied by Dynon to set up and test both the IF DYNON AP SV32 Autopilot Servos and the IF DYNON AP74V Autopilot Module.

Step 9: Adjust the corresponding volume pot on the AV CONTROL BOARD 12. See Page 45-08.

WARNING: WHEN FINISHED INSTALLING THE AUTOPILOT SERVOS, MOVE THE CONTROL STICK THROUGHOUT ITS ENTIRE RANGE OF TRAVEL MANY TIMES (WITH FLAPS UP AND WITH FLAPS DOWN) TO CHECK FOR AN OVER-CENTER CONDITION OF THE AUTOPILOT SERVOS (A CONDITION WHERE THE SERVO ARM AND PUSHROD BECOME CLOSE TO PARALLEL AND THE CONTROL SYSTEM LOCKS).

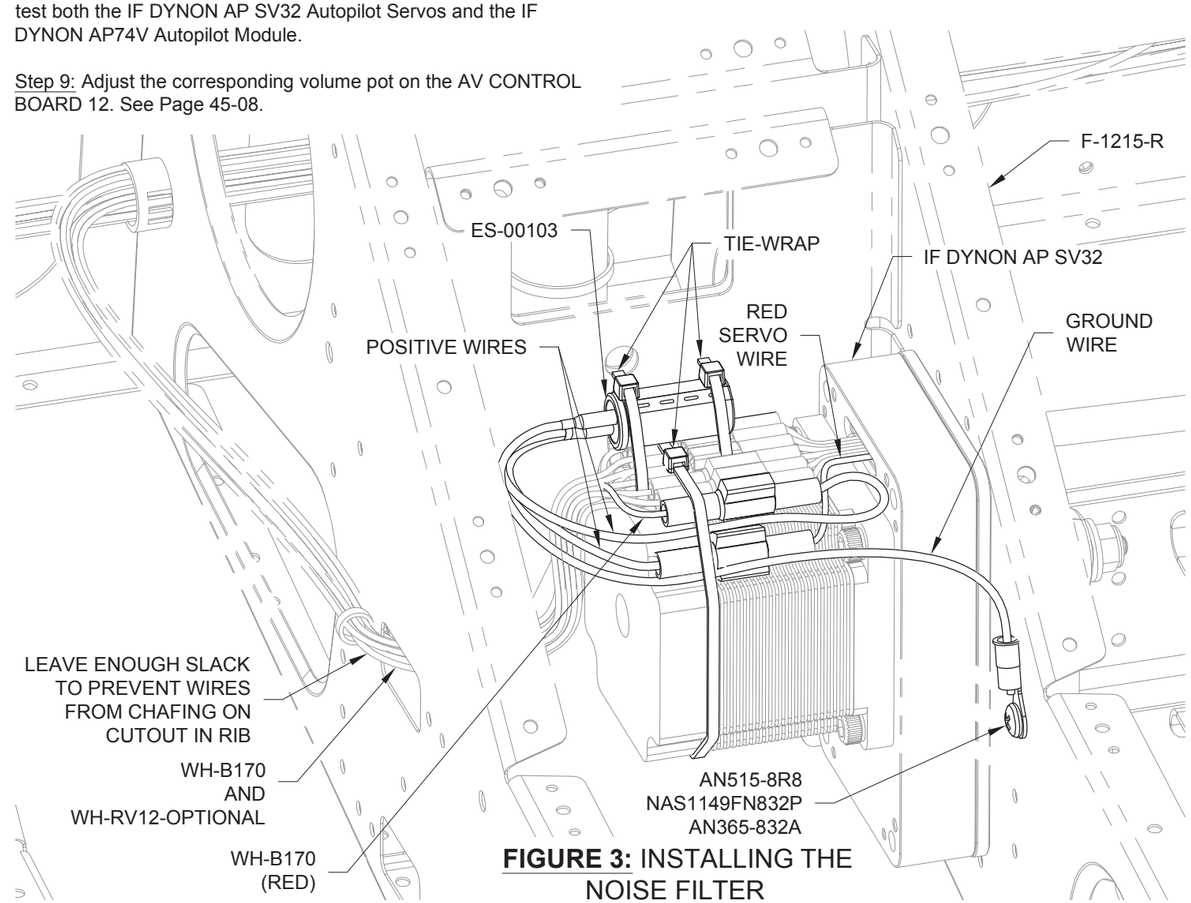

FIGURE 3: INSTALLING THE NOISE FILTER